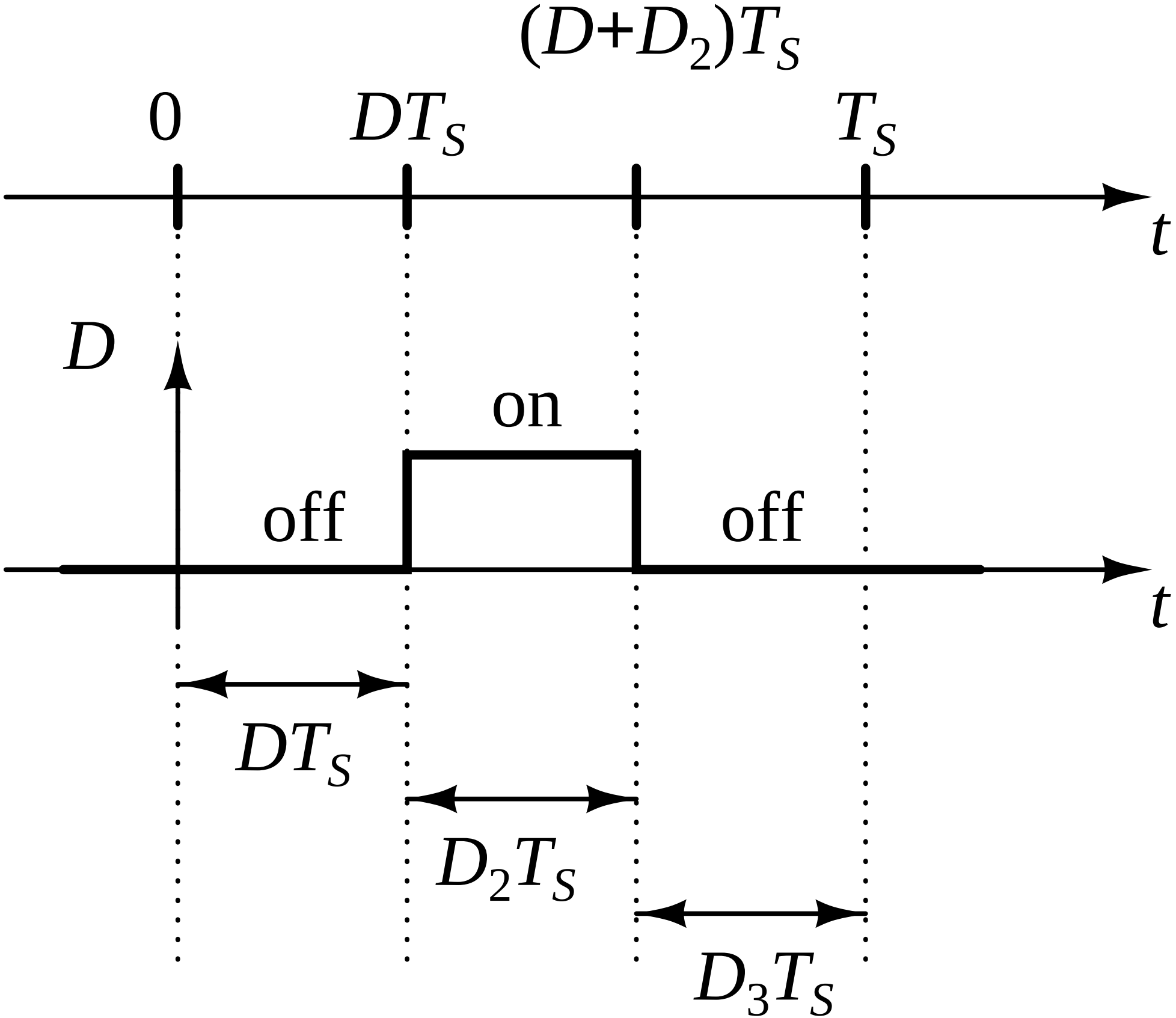
$(D+D_2)T_S$
0
DT_S
T_S
t
D
on
off
off
t
DT_S
D_2T_S
D_3T_S