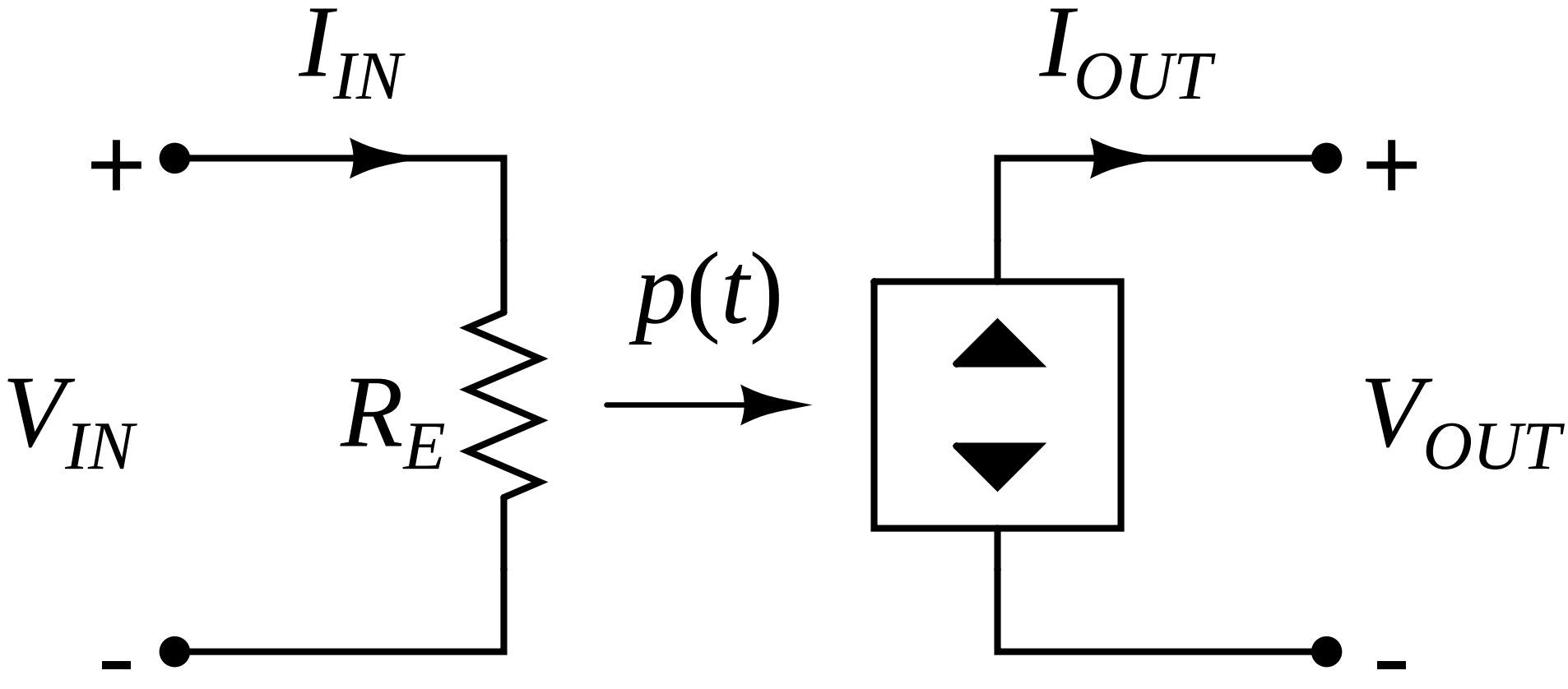
I_{IN}
I_{OUT}
+
+
$p(t)$
V_{IN}
R_E
V_{OUT}
-
-