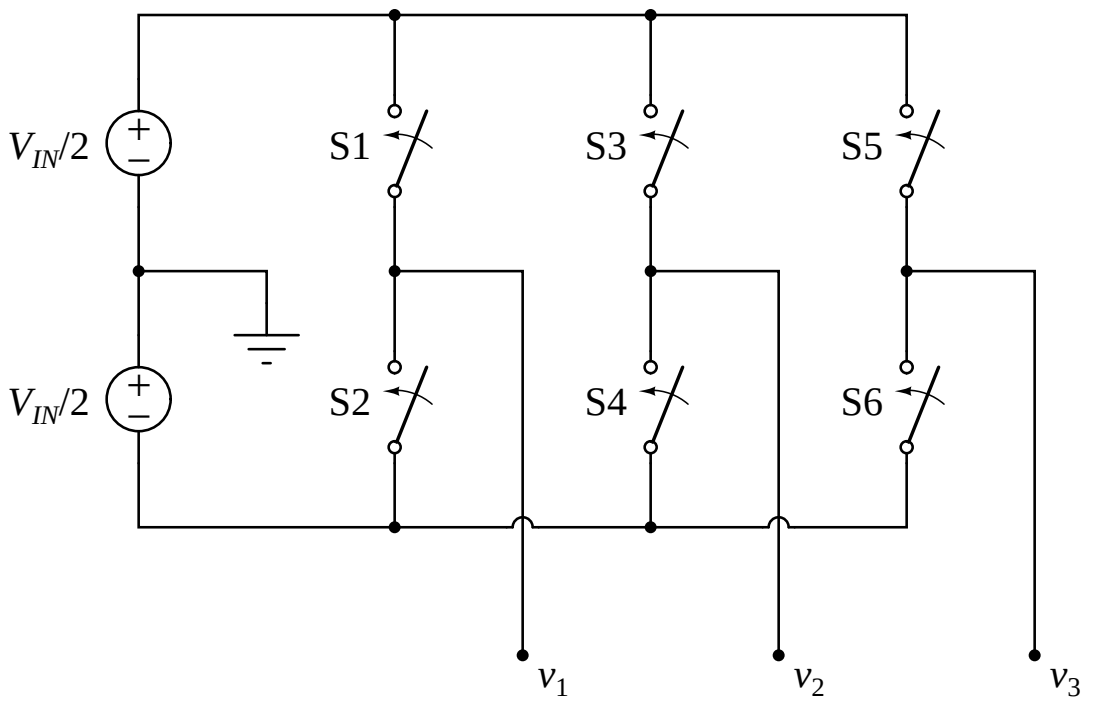
$V_{IN}/2$
$V_{IN}/2$
S1
S2
S3
S4
S5
S6
v_1
v_2
v_3