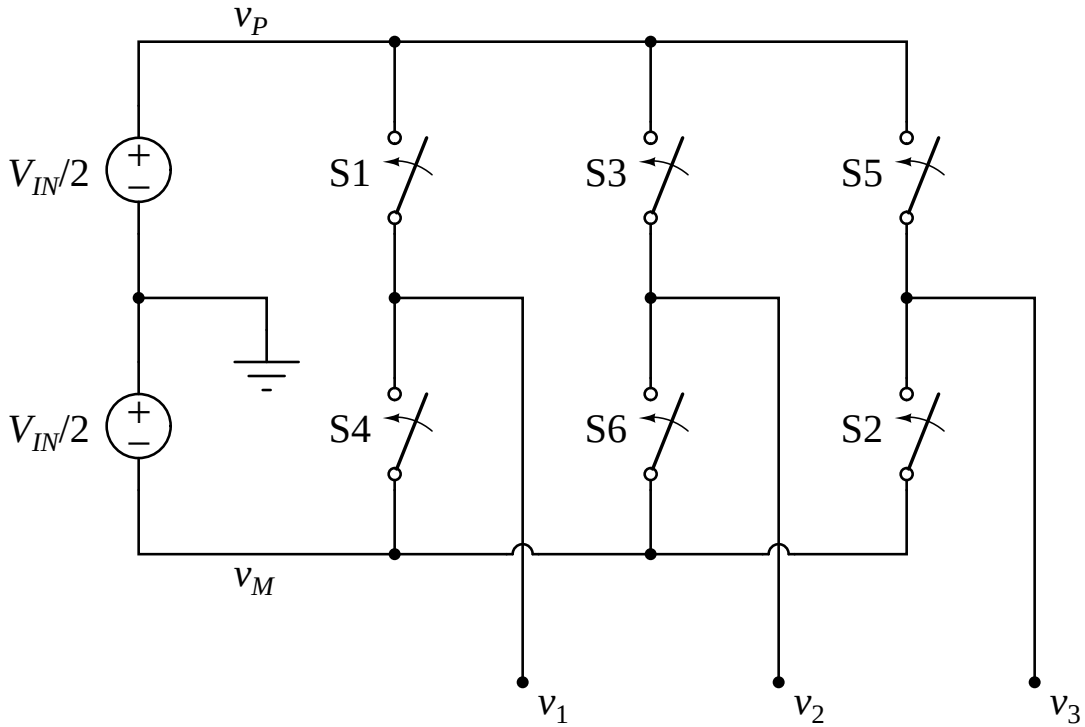
v_P
$V_{IN}/2$
S1
S3
S5
$V_{IN}/2$
S4
S6
S2
v_M
v_1
v_2
v_3