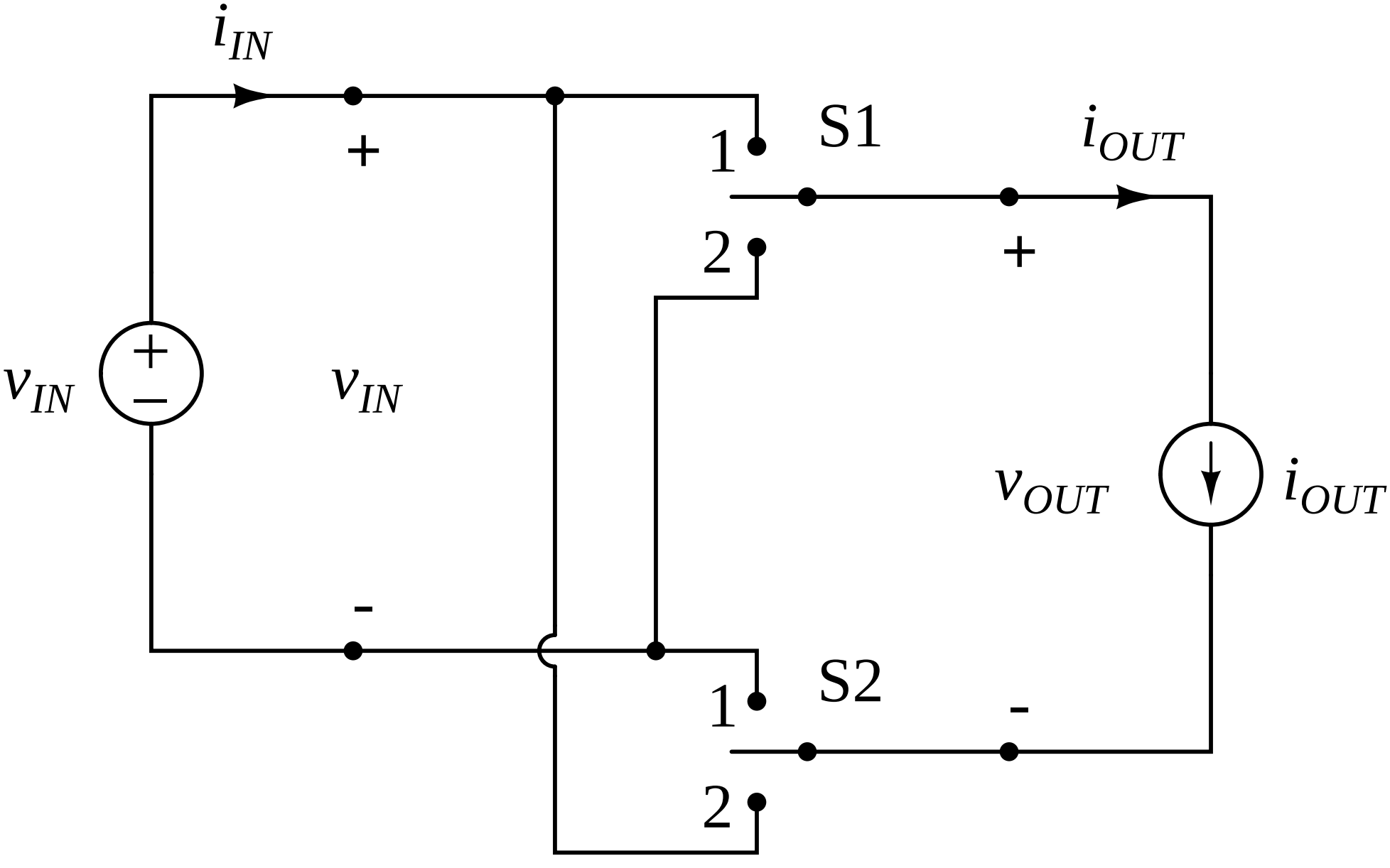
i_{IN}
+
v_{IN}
v_{IN}
-
1
S1
2
1
S2
2
i_{OUT}
+
v_{OUT}
-
i_{OUT}