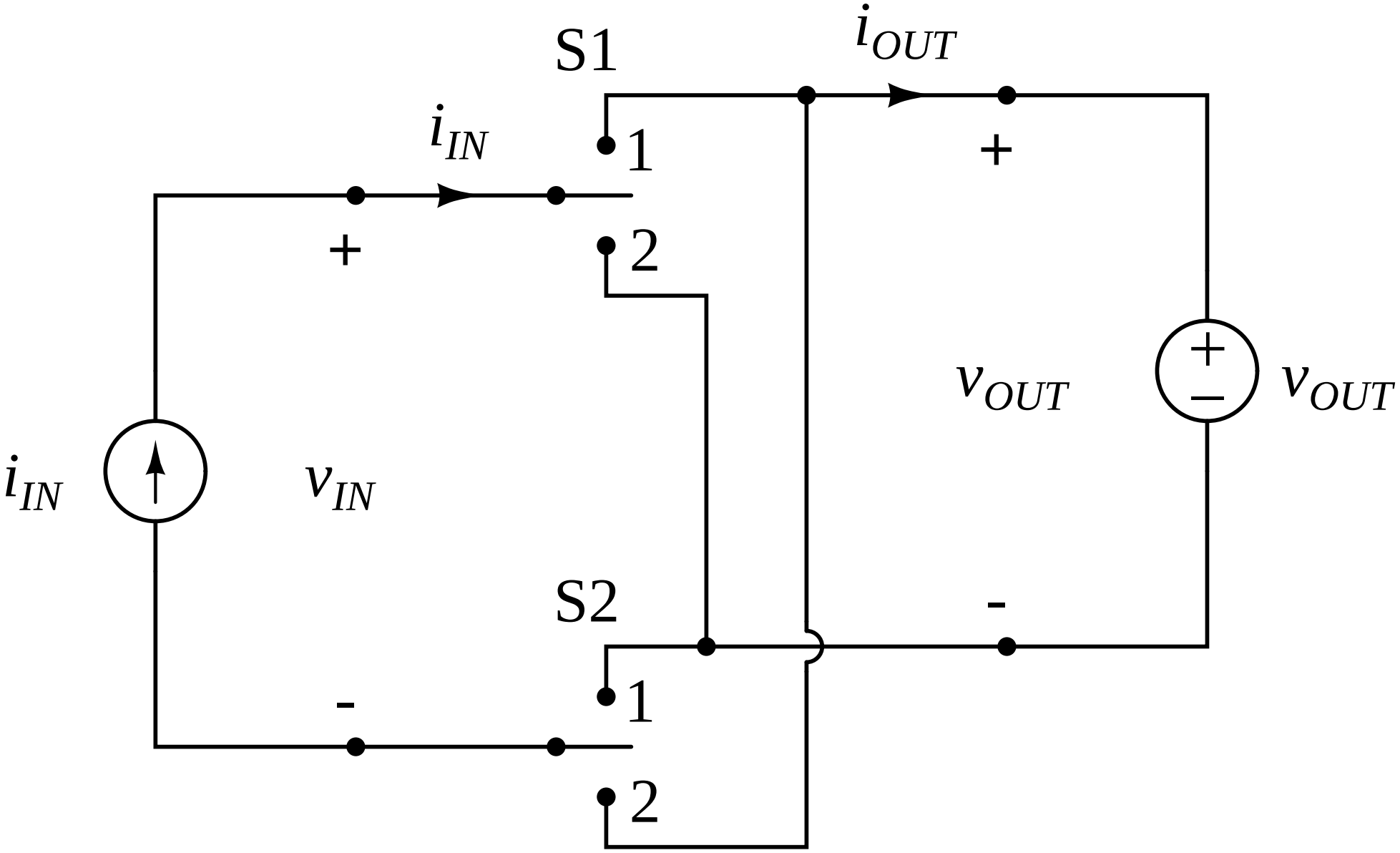
S1
i_{OUT}
i_{IN}
1
+
+
2
v_{OUT}
v_{OUT}
i_{IN}
v_{IN}
S2
-
-
1
2