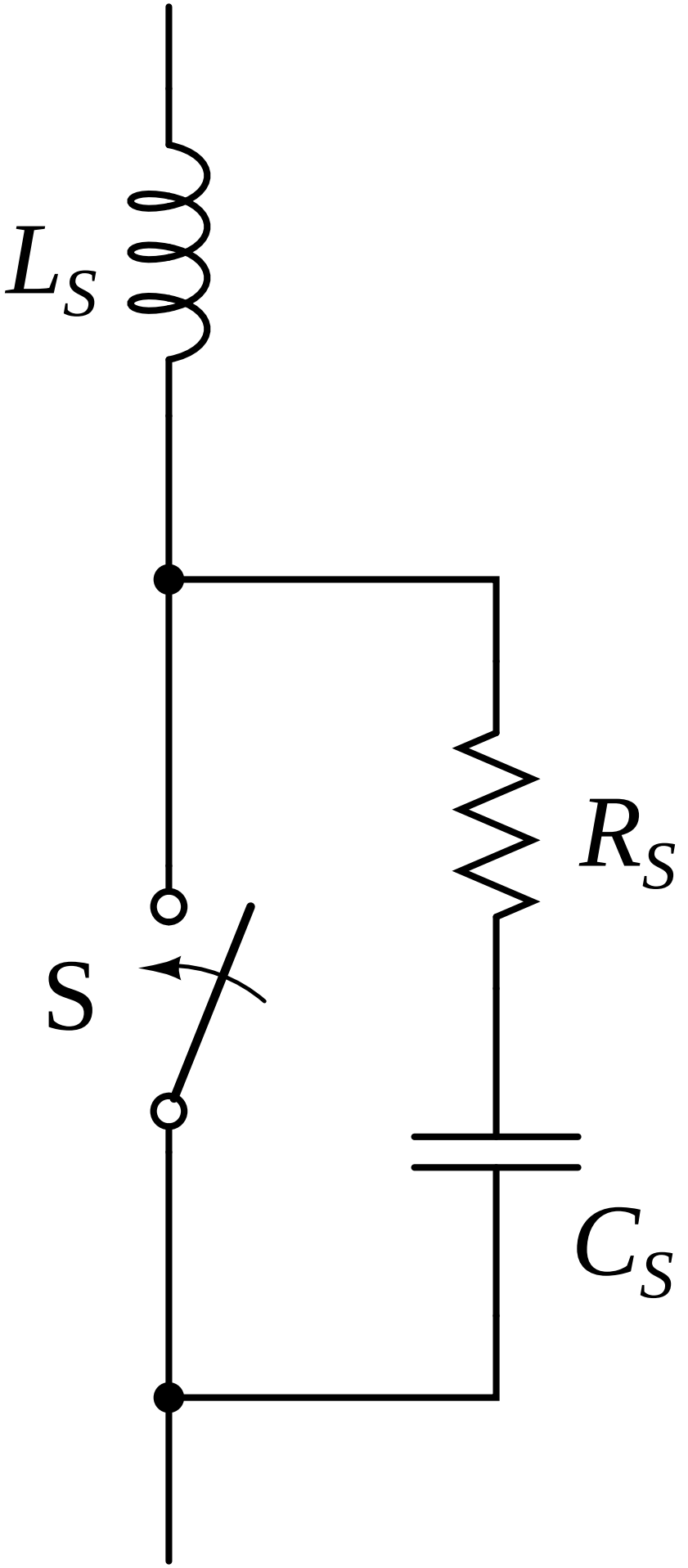
L_S
R_S
S
C_S