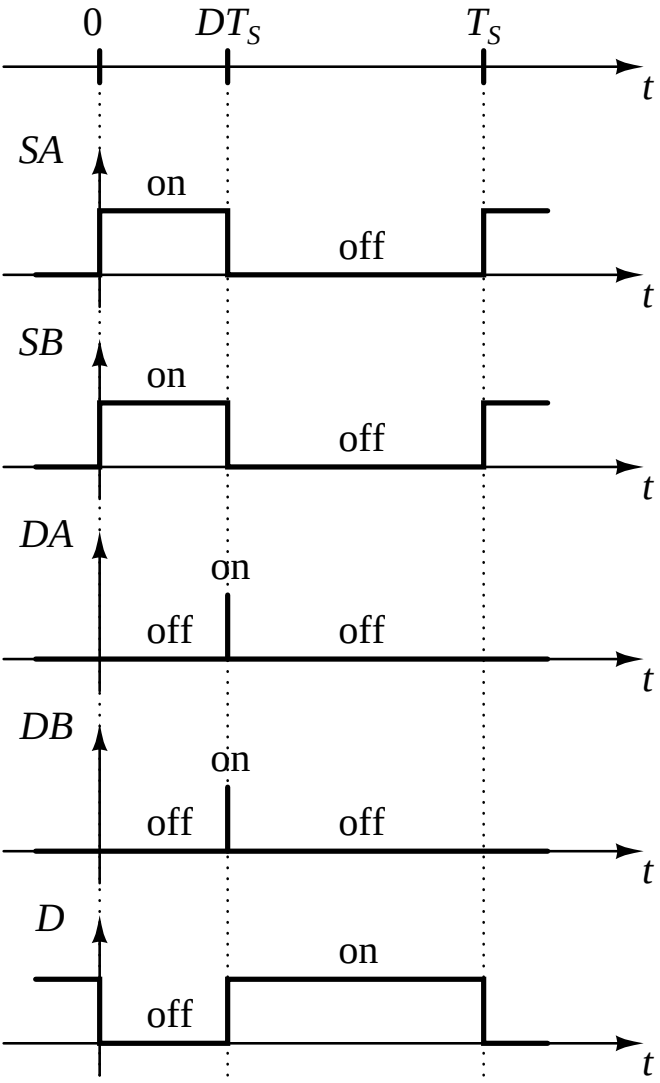
0
DT_S
T_S
t
SA
on
off
t
SB
on
off
t
DA
on
off
off
t
DB
on
off
off
t
D
on
off
t